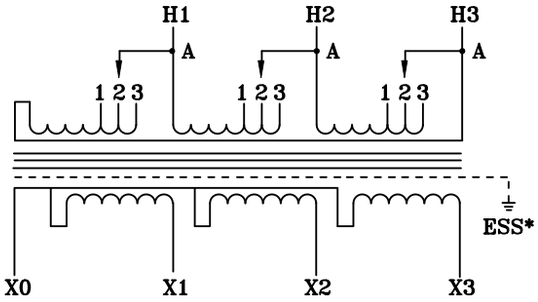

TYPICAL WIRING DIAGRAM

NOTES:

1. ALL UNITS ARE cUL LISTED & DESIGNED ACCORDANCE WITH INDUSTRY STANDARDS
2. TRANSFORMERS ARE DRY–TYPE, CLASS AA, ENCAPSULATED NEMA 3R ENCLOSURE FOR INDOOR / OUTDOOR USE.
3. TRANSFORMERS ARE FLOOR–MOUNTED VIA BOTTOM FLANGE BRACKETS.
4. TRANSFORMERS ARE CONSTRUCTED BASED UPON A 40°C AMBIENT ENVIRONMENT.
5. MAINTAIN 1" CLEARANCE FROM ALL LIVE PARTS.
6. PAINT COLOR IS RAL# 7042.

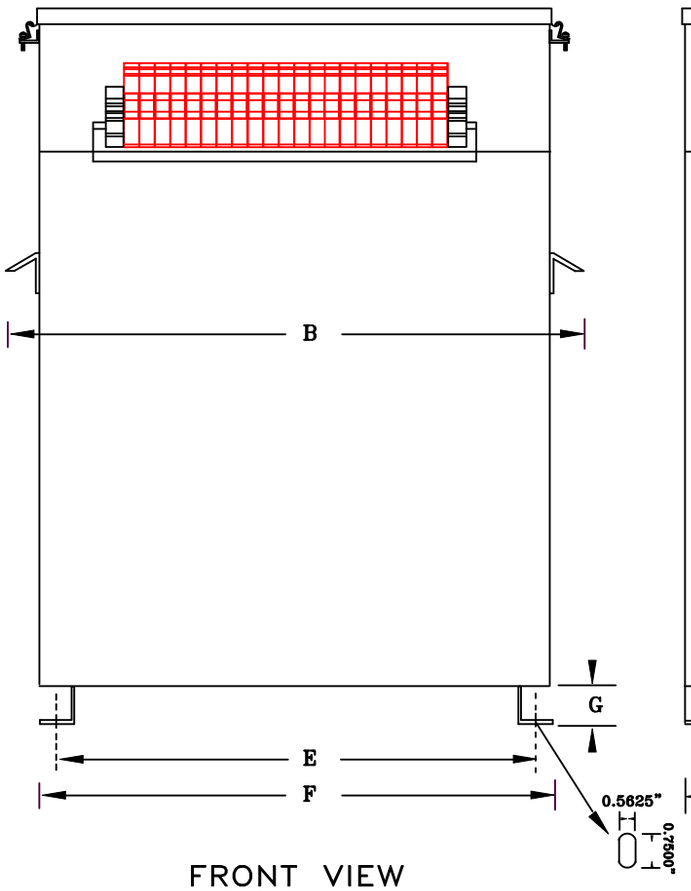

FRONT VIEW

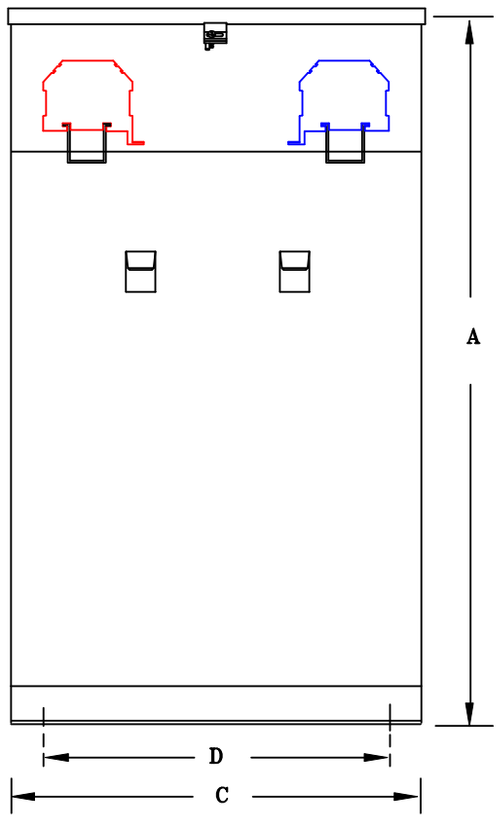

SIDE VIEW

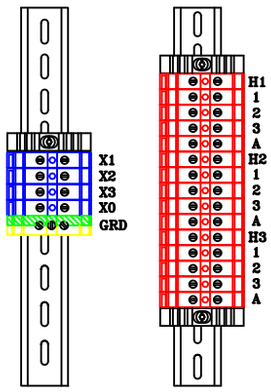

TERMINAL VIEW

APPROXIMATE DIMENSIONS (INCHES)

KVA	A	B	C	D	E	F	G	HARDWARE	MTG SLOTS	ENCLOSURE	WEIGHT	WEATHER SHIELD	TERMINAL TYPE
45.0	26.00	26.00	13.50	10.00	21.00	23.00	3.50	1/2–13	0.562" x 0.750"	3PN4–45K	725	N/A	TBs

DRAWINGS
- [X] APPROVAL
- [ ] RECORD
- [ ] OTHER

PRIMARY VOLTAGE	208 DELTA	CUST.	XXXXXXX		
SECONDARY VOLTAGE	200Y/115	JOB			
TEMPERATURE RISE IN °C	115	CATALOG			
WINDINGS & TERMINALS	[ ] ALUMINUM [X] COPPER	NOTE	XXXXX		
FREQUENCY HERTZ	60	BY	ENG. LOG.	TITLE	3–PHASE, 600 VOLT CLASS ISOLATION DRY TYPE TRANSFORMER
PRIMARY TAPS	198, 218	DATE			
POWERTRAN		REV	MFG. LOG.	DWG. NO.	3EF814FST45
		DATE:	DWG. FILE		