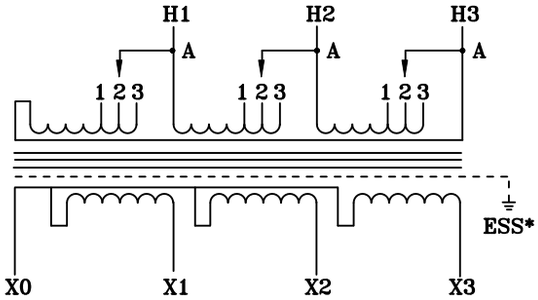

TYPICAL WIRING DIAGRAM

NOTES:

1. ALL UNITS ARE cUL LISTED & DESIGNED ACCORDANCE WITH INDUSTRY STANDARDS.
2. TRANSFORMERS ARE DRY–TYPE, CLASS AA, ENCAPSULATED NEMA 1 ENCLOSED FOR INDOOR USE.
3. TRANSFORMERS ARE WALL / MACHINE MOUNTABLE VIA THE ATTACHED BRACKETS.
4. TRANSFORMERS ARE CONSTRUCTED BASED UPON A 40°C AMBIENT ENVIRONMENT.
5. MAINTAIN 1" CLEARANCE FROM ALL LIVE PARTS.
6. PAINT COLOR IS RAL# 7042.

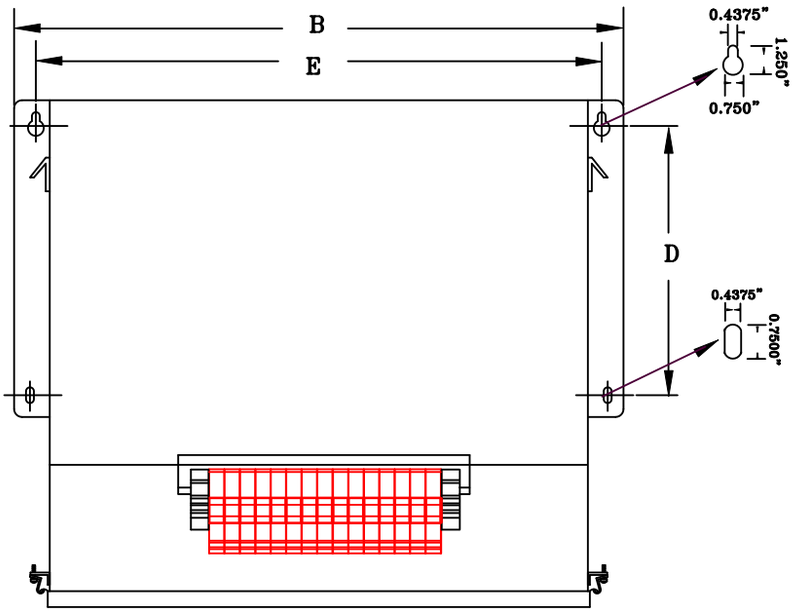

FRONT VIEW

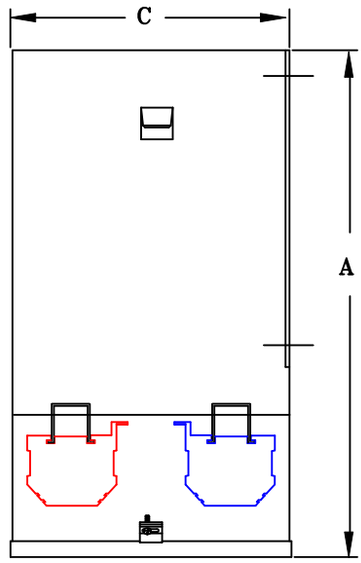

SIDE VIEW

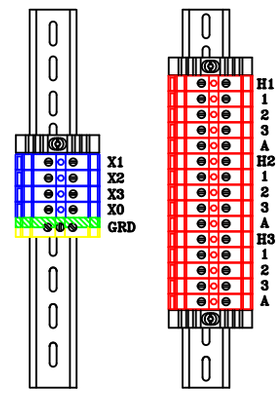

TERMINAL VIEW

APPROXIMATE DIMENSIONS (INCHES)

KVA	A	B	C	D	E	F	HARDWARE	MTG SLOTS	ENCLOSURE	lbs.	WEATHER SHIELD	TERMINAL TYPE
9.0	16.25	19.12	8.50	8.50	17.75	----	3/8–16	0.437" x 0.750"	3N10	195	N/A	TBs

* ELECTROSTATIC SHIELD GROUNDED TO TRANSFORMER CASE AT FACTORY (IF APPLICABLE)

DRAWINGS
- [X] APPROVAL
- [ ] RECORD
- [ ] OTHER

PRIMARY VOLTAGE	600 DELTA	CUST.	XXXXXXXX		
SECONDARY VOLTAGE	380Y/220	JOB			
TEMPERATURE RISE IN °C	115	CATALOG			
WINDINGS & TERMINALS	[ ] ALUMINUM [X] COPPER	NOTE	XXXXXXX		
FREQUENCY IN HERTZ	60	BY	ENG. LOG.	TITLE	3–PHASE, 600 VOLT CLASS ISOLATION DRY TYPE TRANSFORMER
PRIMARY TAPS	570, 630	DATE			
POWERTRAN		REV	MFG. LOG.	DWG. NO.	3EF597FST9
		DATE:	DWG. FILE		